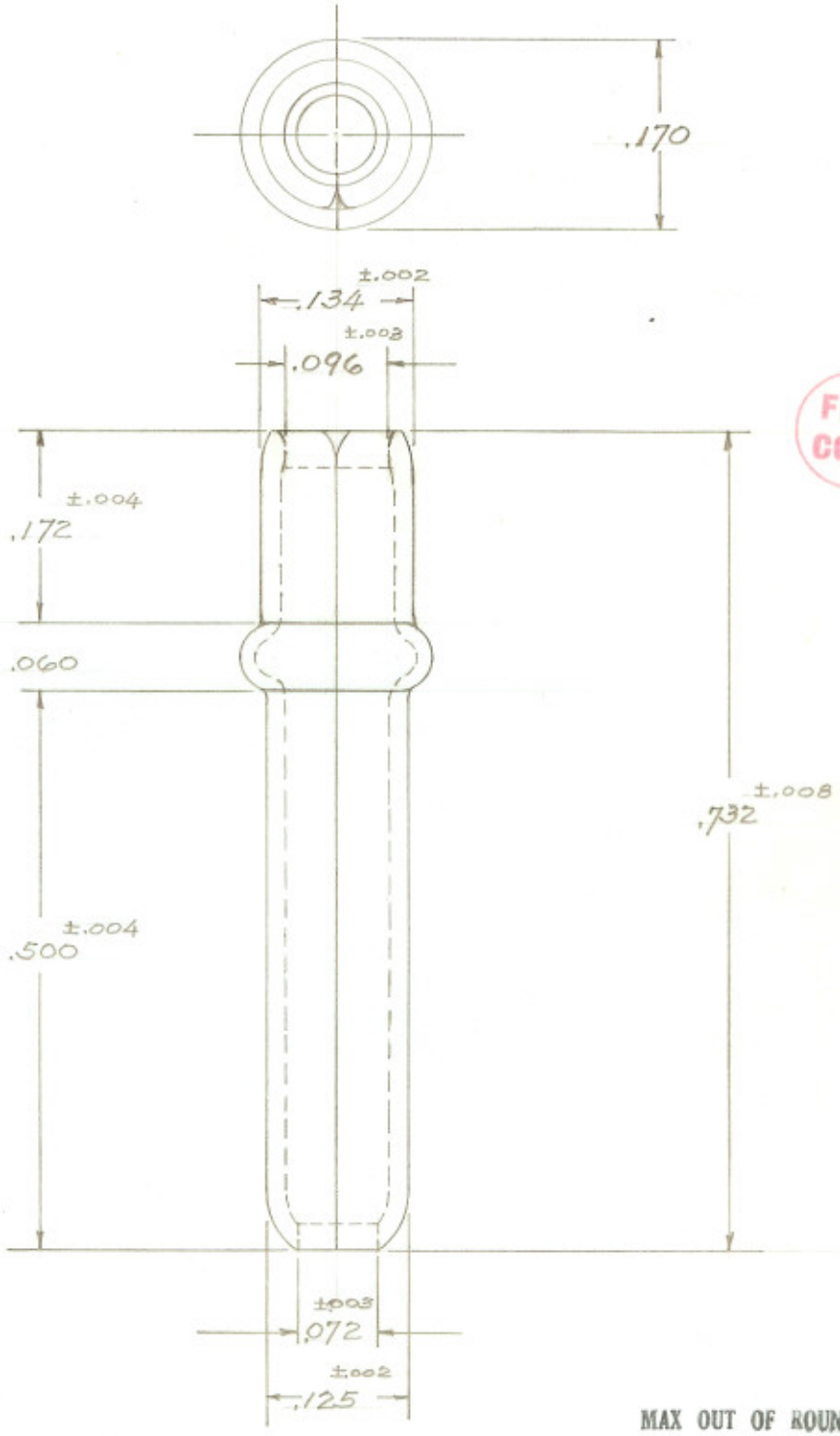

FILE COPY

MAX OUT OF ROUNDNESS FOR ANY DIAMETER IS .003"

ALL DIAMETERS TO BE MEASURED BY RING GAGE

NO PINS WITH BURRS SHALL BE GAGED FOR LENGTH

NOTE -

MAKE IN R125-8 DIES WITH OPENING PUNCH & END DIES

TOLERANCES—DECIMALS ± .005" FRACTIONS ± .010" EXCEPT AS SPECIFIED

REVISIONS	MATERIAL	THE BEAD CHAIN MFG. COMPANY BRIDGEPORT, CONN.	
	BRASS		
		PART RADIO PIN	
	DATE AUG. 13, 1962	DRAWN BY ABW	R125-8A
	SCALE 6:1	APPROVED	